SMARTCUBE 40 THERMOELECTRIC SC40T MODEL SPECIFICATIONS

(Automated)

SMART CUBE®

SmartCube 40T Model Specification

MINIBAR SYSTEMS

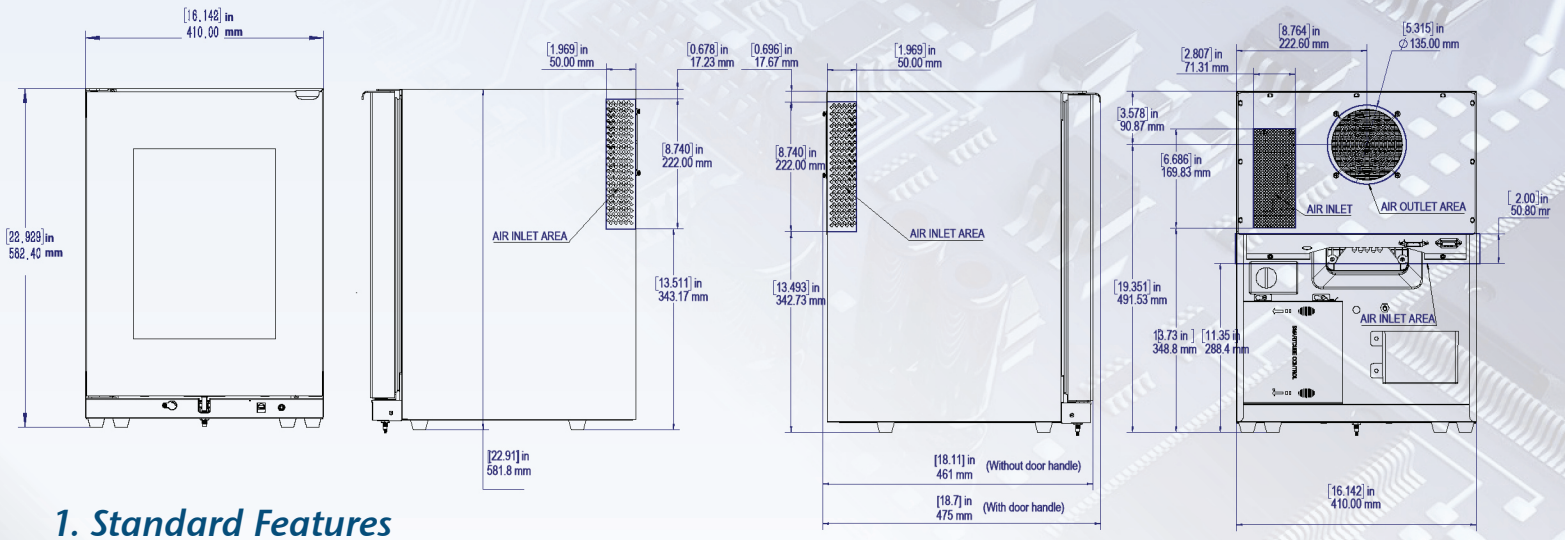

1. Standard Features

- *Environmentally sustainable energy efficient thermoelectric cooling system*
- *Console Box (control module) can be serviced easily and located remotely*
- *Shelves use infrared sensors (no moving or mechanical parts)*
- *Plug-and-play cold cube shelving and door racks (no cables)*
- *NEW robust electronic lock with mechanical override feature*
- *Removable product dividers for easy cleaning*
- *Cyclopentane thermal foaming insulation (reduces ozone depletion)*
- *Reversible door hinging*
- *Magnetically sealed doors*
- *Internal LED lighting*
- *Automatic defrost*
- *Self-diagnostic reporting software*
- *ADA compliant*

2. Technical Specifications

	SC-40 Thermoelectric
Part Number	SC-40T
Cooling Type	Peltier Thermoelectric Superconductor 5 Heat Pipe
Capacity (liters / cubic feet)	40 / 1.41
Dimensions HxWxD (inches)* HxWxD (mm)*	22.92 x 16.14 x 18.7* 582.4 x 410 x 475*
Door Option	Full Glass Front: No Window, Full Window, Partial Window, Stainless Full Window Solid Laminated: Black Solid, Stainless Steel
Watts (W)	60W
Voltage (V)	110V / 60Hz 220V / 50Hz
Amps	0.5-0.9
Energy Consumption (kWh/24h)**	0.5 kWh/24h**
Net Weight (lbs / kgs)	46.5lbs / 21.1kgs
Noise Level (dB)	40 dB
Certification	CSA/CE/FCC/ETL/WEEE/RoHS ISO 9001 and ISO 14001 certified

Full Glass Door Options

Customized silkscreening available including logo's

Solid Laminated Door Options

* Measured to door handle

**Average energy consumption per 24 hours, at 25°C (77°F) ambient temperature and 7°C (44.6°F) cooling temperature, in compliance with EN ISO 7371

3. SmartCube Sensor Shelf Configuration

SmartCube has interior sensor shelves for both the cold cube and the door. There are three possible shelf configurations for both the cold cube and the door. Please note that a sensor shelf is required in the top locations of the door and cold cube.

3.1 Door and Cold Cube Sensor Shelves

Conformal coated and sealed to keep out moisture

door rack shelf

cold cube shelf

3.2 Customizable Door Racking Configurations

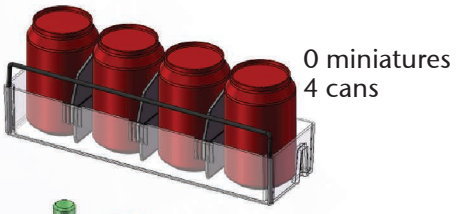

0 miniatures
4 cans

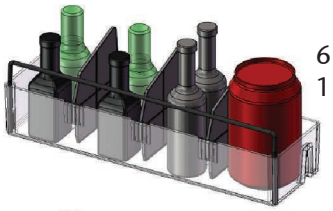

6 miniatures
1 cans

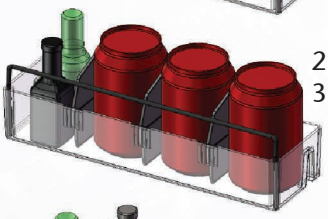

2 miniatures
3 cans

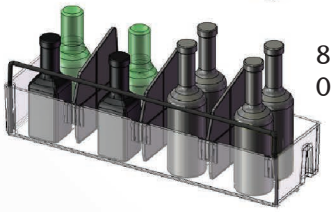

8 miniatures
0 cans

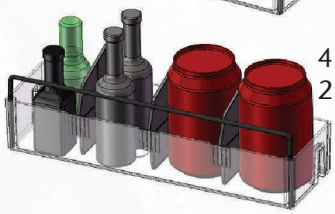

4 miniatures
2 cans

divider

spacer

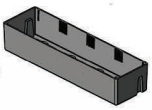

door tray

3.3 Shelf Dividers Prevent Guest Personal Use

- *Designed to prevent storage of guests personal items*
- *Improved product placement and display*

Plug-and-Play

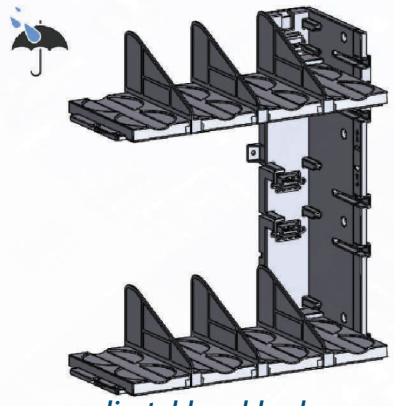

adjustable cold cube sensor shelves

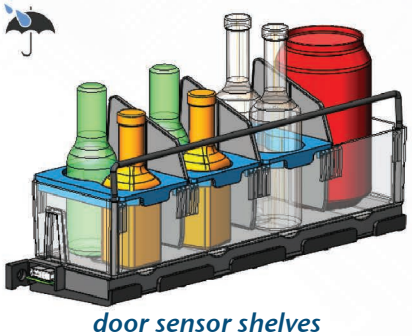

door sensor shelves

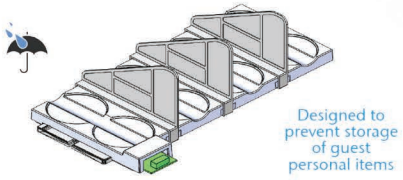

cold cube sensor shelf dividers

console box (control module)

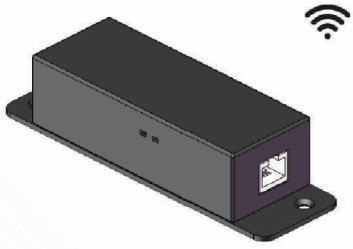

ethernet or wi-fi

4. Plug-and-Play - No cable connection

5. Console Box (Control Module)

- *Console Box contains all Printed Circuit Board Assemblies (PCBA's): mainboard, lock, bluetooth, & communication*
- *Flexible mounting options for ease of maintenance*
- *Wi-Fi module has an extension cable to achieve maximum signal connectivity*
- *Console Box easily replaced without troubleshooting individual PCBA's*

5.1 Console Box Mounting Locations

Console Box can be mounted on the SmartCube, on the SmartTray or alternate location

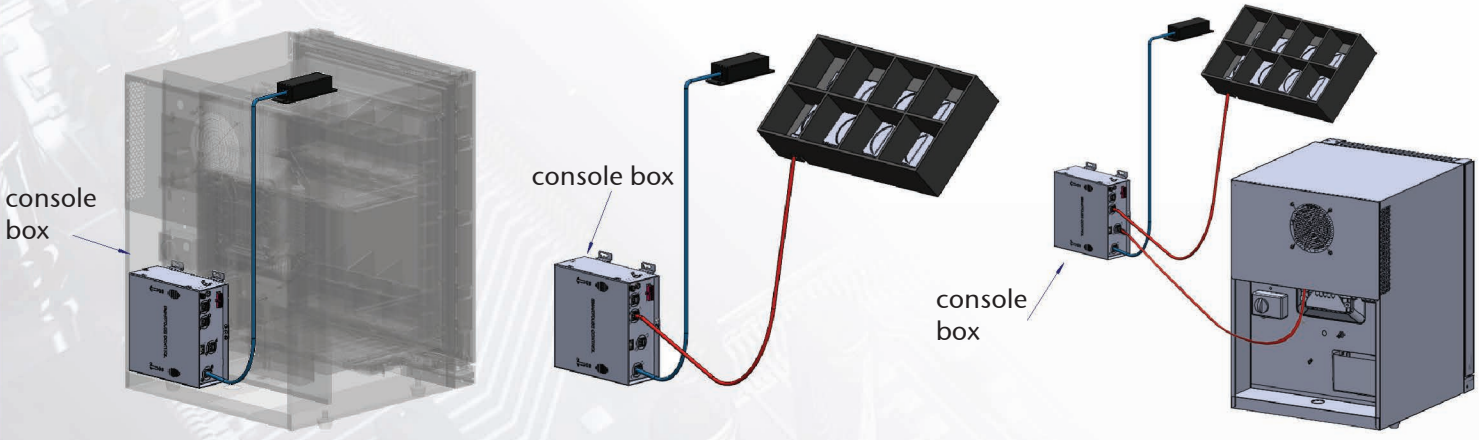

attached to the bar | *attached to the Wi-Fi SmartTray* | *alternate location*

6. Ventilation – Basic Principles

Ventilation occurs by convection, which is the tendency of hot air to rise and colder air to sink. See recommendations in 6.1 through 6.4 on how to achieve proper ventilation.

Note: Proper ventilation and installation are required in order to not void SmartCube warranty.

6.1 Front Air Intake Ventilation (Toe Kick)

The inlet vent(s) must have a minimum open area of 32in² (0.81m²) to comply with specifications. This is based on a typical guest room environment of 77° F (25° C) with a relative humidity of no more than 65%. The inlet vent can be provided in any of the following configurations:

i. ***A cut-out in the toe kick***
ii. ***A series of slots in the toe kick***
iii. ***A grill in the toe kick***
iv. ***An arched opening in the toe kick***

Note: For optimal ventilation a door should not be installed in front of SmartCube.

6.2 Case Good Base Ventilation (Bottom Cut-Out)

The cabinet bottom is to be cut away directly behind and below the cooling unit. The shelf cut-out must have a minimum open area of 62in² (1.57m²). The easiest way to accomplish the required ventilation is to cut away across the complete width and extend the cut out back to the rear of the case good.

6.3 Case Good Side Ventilation (Side Vent)

Side inlets should be cut to a minimum open area of 54in²(1.37m²). It is recommended to have two side inlets but at a minimum of one inlet would be acceptable alternative.

6.4 Exhaust Ventilation (Grill or Back Vent)

1. ***Top Exhaust Ventilation – Grill/Vent cut out on top for trapped heat to escape***
2. ***Back Exhaust ventilation – Cut out in the back allowing trapped heat to escape.***

Note: Ventilation from back requires a minimum 1.5in (38mm) air gap behind the case good for exhaust flow.

Front View Fig 6.1 & Back Ventilation Fig 6.4

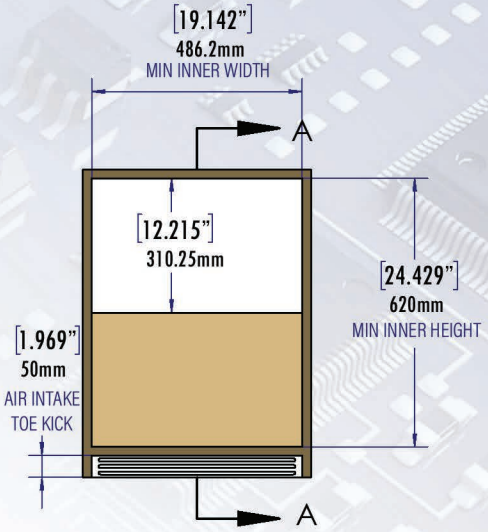

Bottom View Fig 6.2

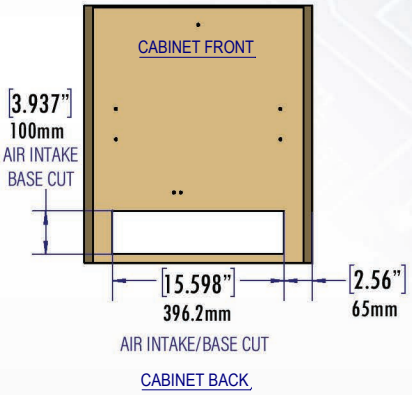

Side Section View Fig 6.3

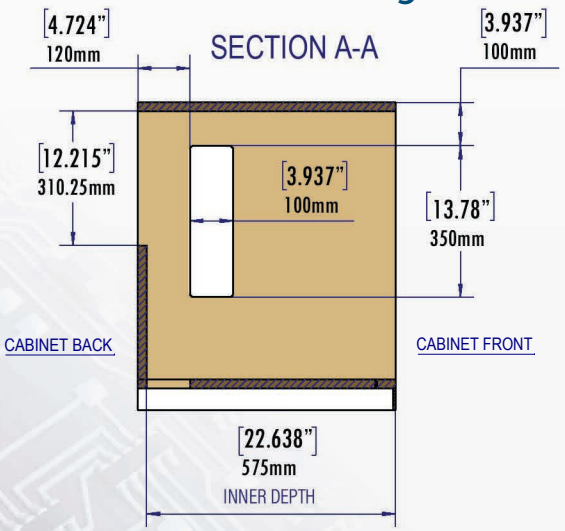

6.4 Exhaust Ventilation Continued

Exhaust ventilation is required in the case good to prevent warm air from being trapped in the top section causing the SmartCube to overheat. The exhaust vent(s) must have a minimum open area of 233.82in² (150.84m²) to comply with specifications. The exhaust vent(s) can be provided in any of the following configurations:

i. A series of slots or a grill in the top

ii. A series of slots or a grill in the back at the top

iii. If the design will not permit the use of slots or a grill, the unit should be spaced 1.5" (38.1mm) from the wall to allow proper exhaust. Use spacers or stoppers to prevent the case good from being pushed up against the wall. In this configuration, the back of the case good must be cut away see Fig 6.1. The underside of the shelf above the SmartCube must be flat so that there are no obstruction to the airflow.

Top View Fig 6.4 (Optional Ventilation)

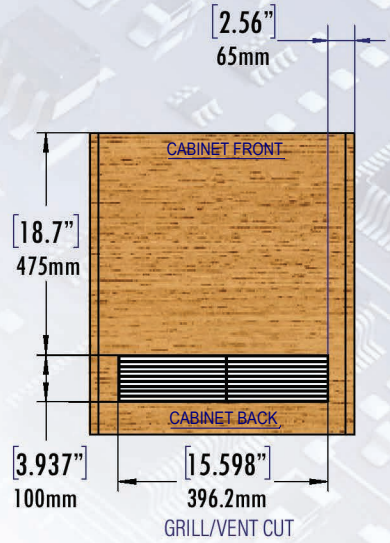

The exhaust vent must exit into free space in the guest room. It must not vent into an enclosed space such as a closet, case good or ceiling void, as the heat will be trapped. The SmartCube must not be placed up against a heating radiator, window curtains or in direct sunlight. Ventilation grills or slots must not be covered. Please contact your Minibar Systems representative for review and certification of your case good design and drawings to ensure your design meets the SmartCube and SmartCube Case Good Specifications. If these ventilation requirements are not met, the warranty is void. The case good documents can be found on the SmartCube.MinibarSystems.com website or from your Minibar Systems representative.

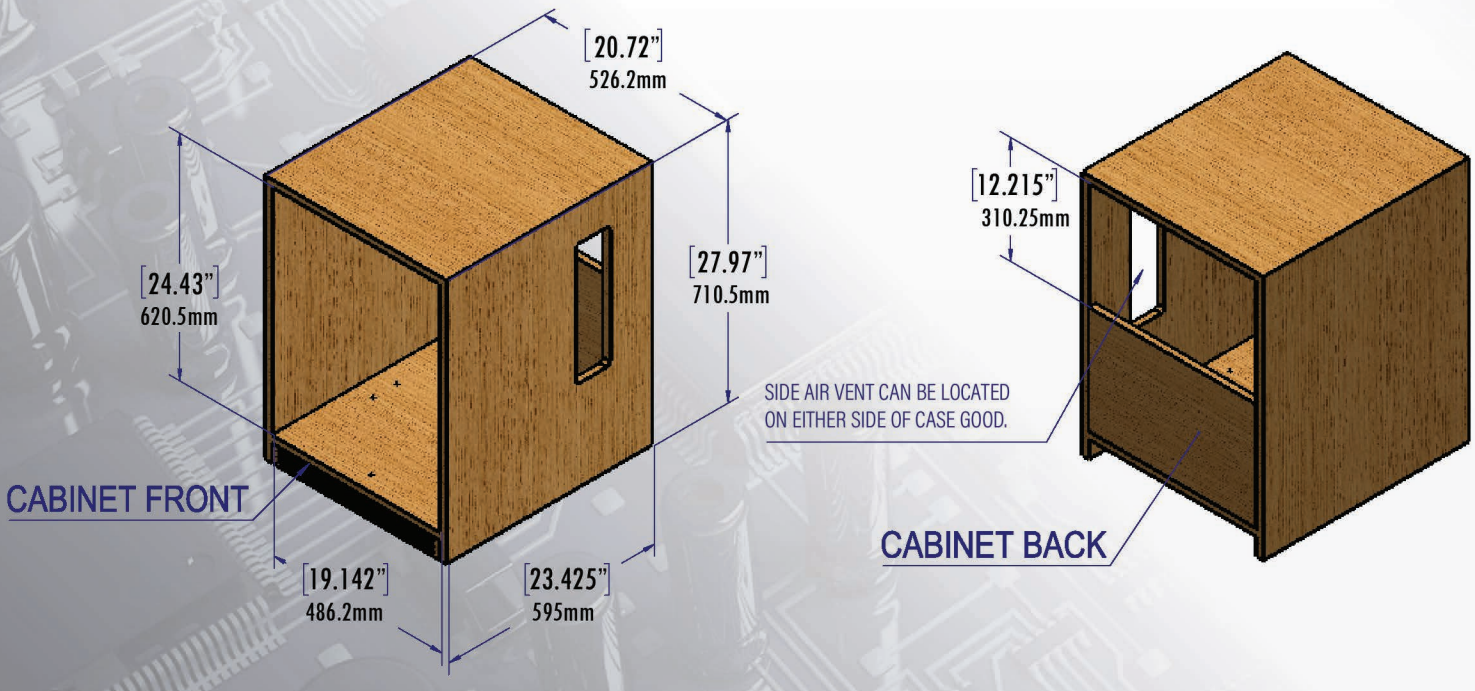

7. Ventilation and Cavity Requirements

Lateral cut-outs should line up with air intakes and air outlets.

Minimum Ventilation	Optimal Ventilation	Optional
- Toe Kick - Base Cut-Out - One Lateral Side Cut-Out - Back Cut-Out	- All Minimum Ventilation Requirements - 2nd Lateral Side Cut-Out - No Door	- Counter Top Vent

7.1 Space Required Between Case Good and Wall

Case good should be installed 1.5" (38mm) from the wall

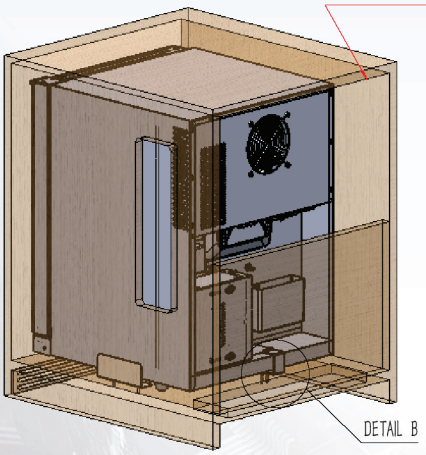

Keep at least 1.5" (38mm) clearance around the minibar and case good

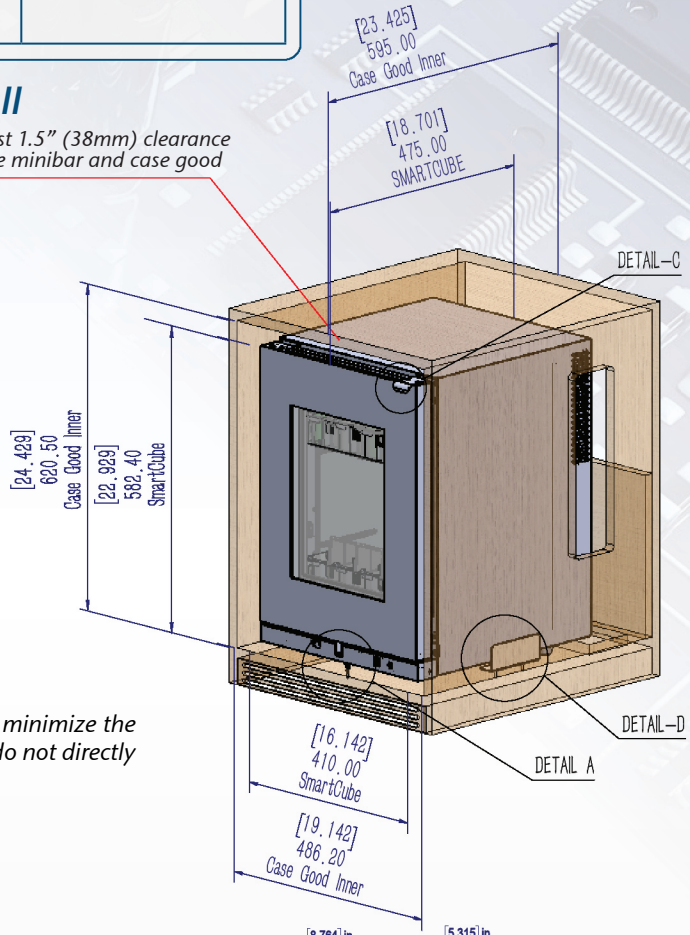

Note: If cut-outs align with air intake/outlets of the SmartCube you can minimize the size of the area surrounding the SmartCube by 1.5" (38mm). If cut-outs do not directly line up then a 1.5" (38mm) air gap is required around the unit.

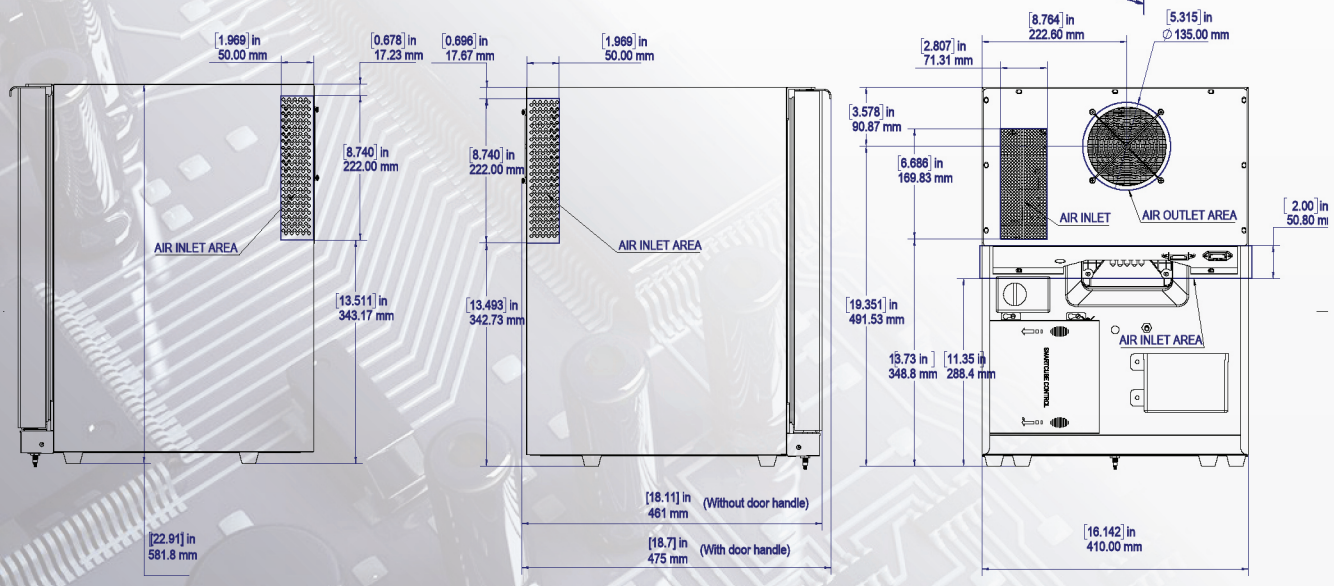

8. Installing Anti-Tilt Bracket and Securing to Case Good

SmartCube should be secured to case good using supplied hardware: 2 side brackets, anti-tilt bracket, and front mounting screw.

8.1 Installing Anti-Tilt Bracket

Anti-tilt bracket should be mounted to bottom of case good using provided hardware and template.

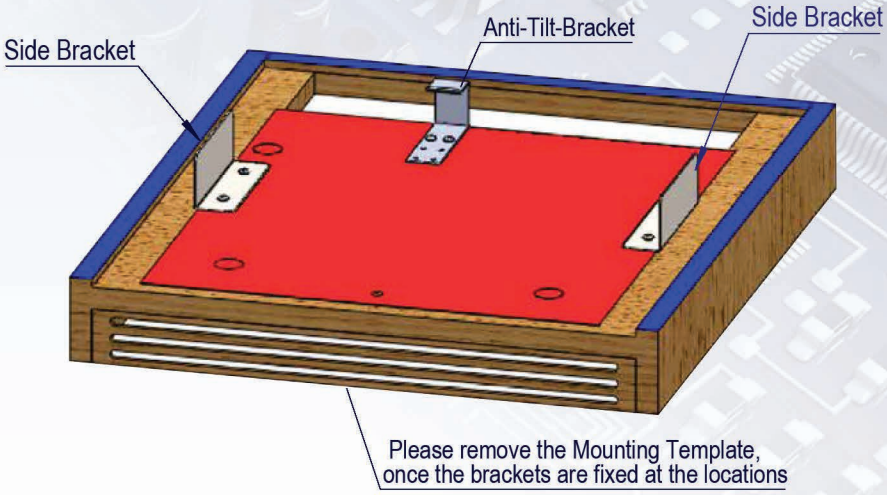

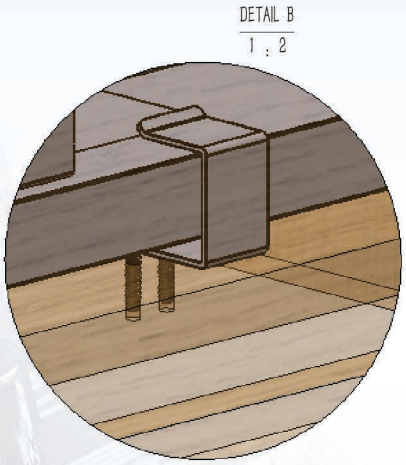

8.2 Mounting Side Bracket

Side brackets should be mounted to case good using provided hardware and template.

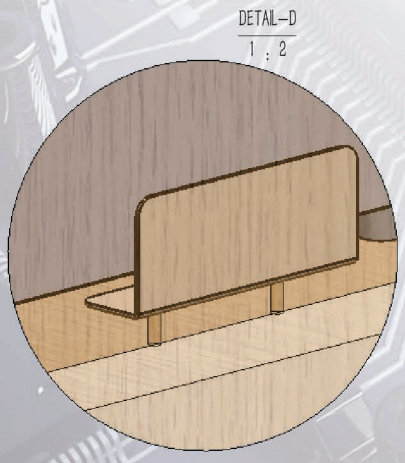

SmartCube 40T Mounting Template

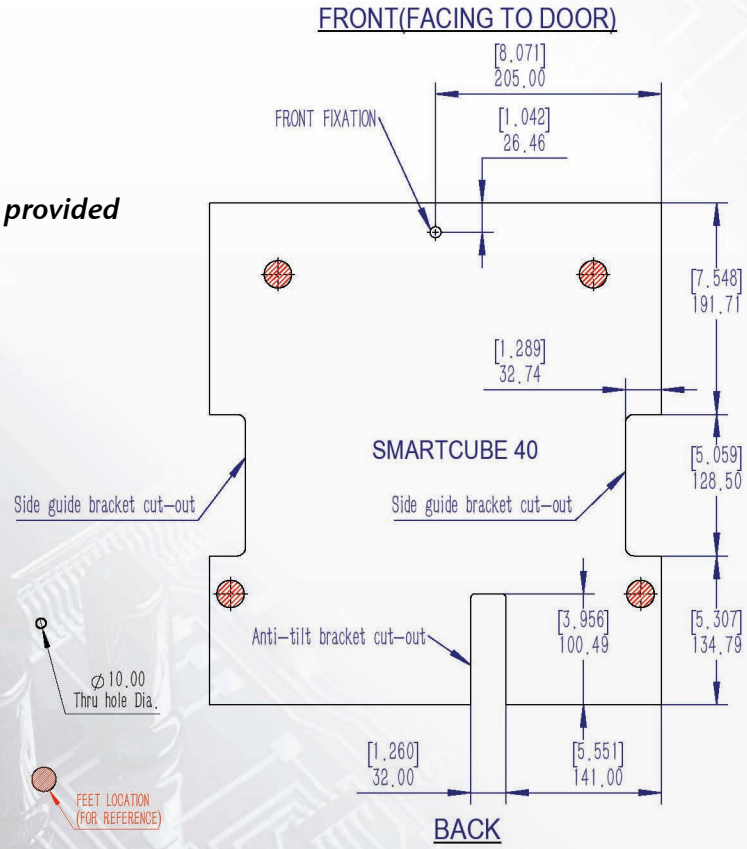

8.3 Installing & Anchoring SmartCube

SmartCube should be secured to case good from front using supplied hardware: front mounting screw

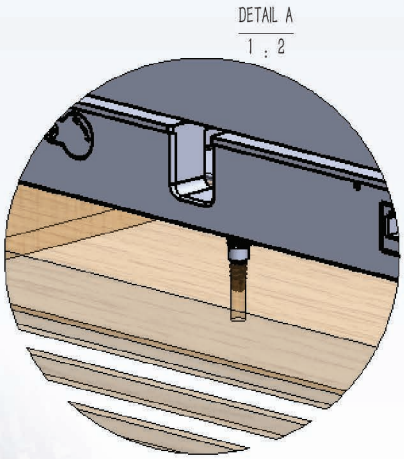

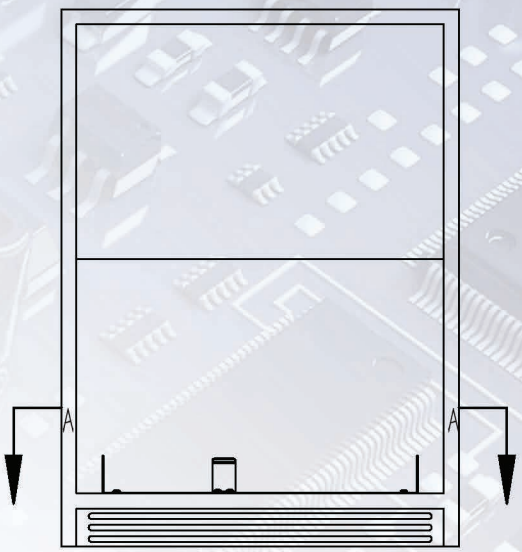

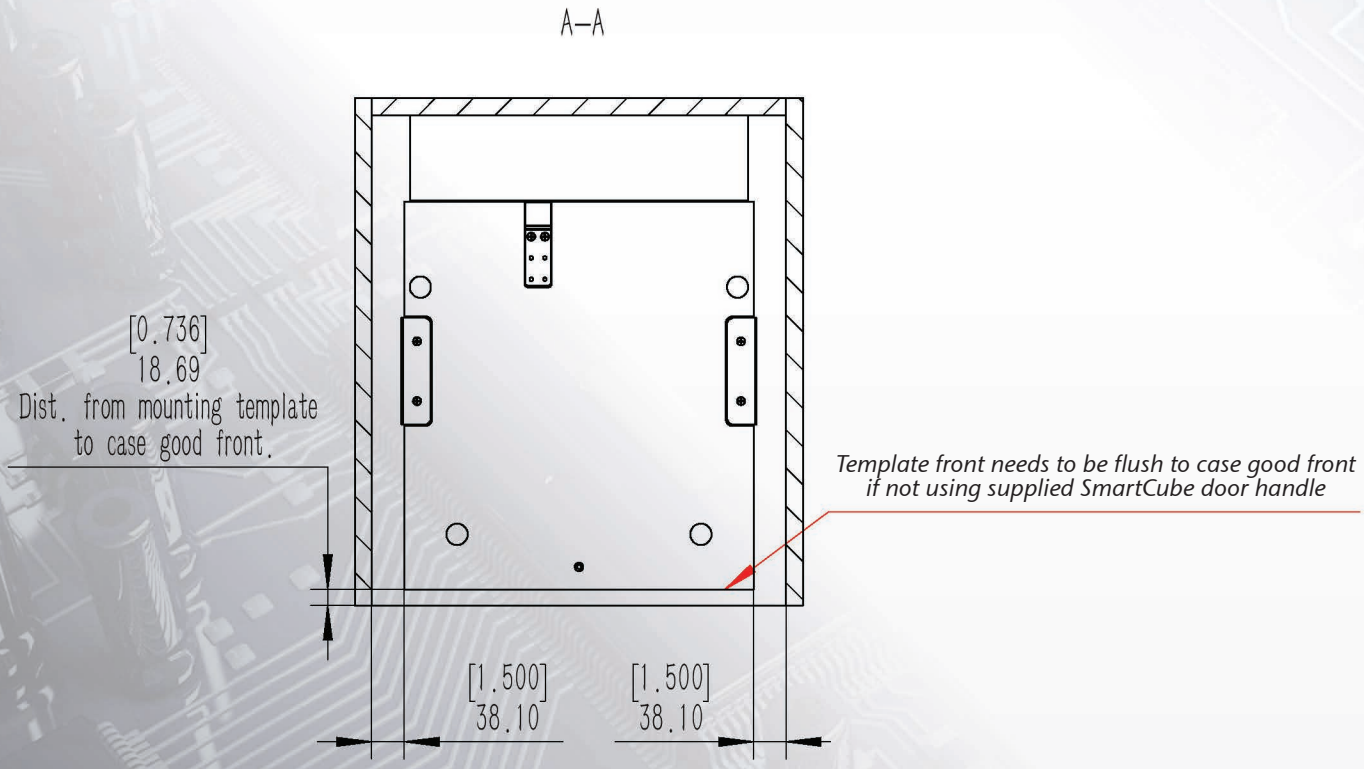

SmartCube 40T Model Specification

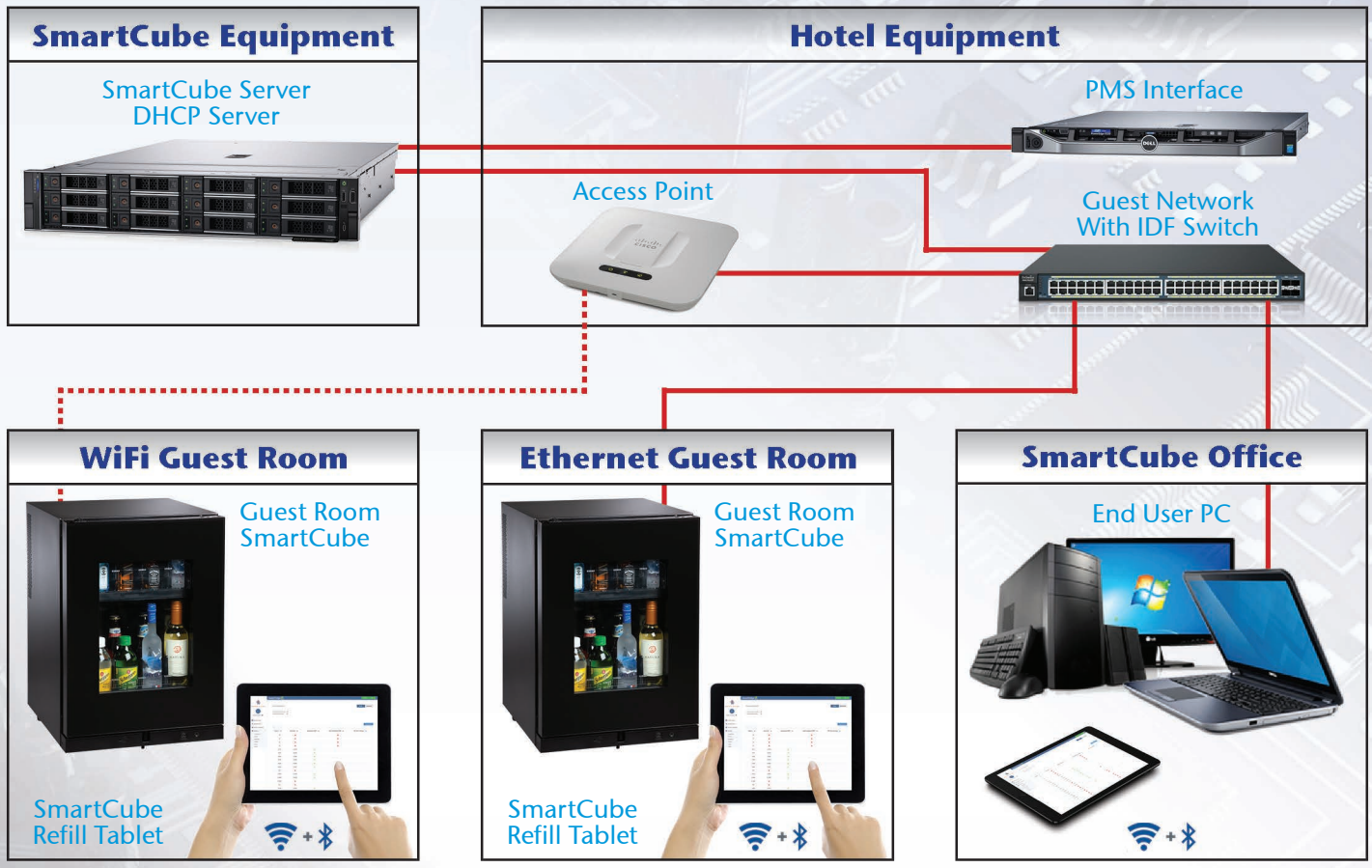

Server Minimum Requirements	
Type	Physical or Virtual
Processor	Dual Core 3GHz or faster (x86 or x64)
Memory	32GB Dedicated RAM
Operating System	Windows Server 2019 R2 (64 bits), 2022
Disk Space	500 GB minimum with redundancy (1TB recommended)
SmartCube Connection	10/100/1000 Ethernet
PMS Connection	10/100/1000 Ethernet or RS232

Network Requirements		
SmartCube Communication		SmartCube Server on Static IP Address on Dedicated SmartCube VLAN
PMS communication		SmartCube Server on a Static IP that is routed to the PMS Interface
Port		Purpose
10001	UDP	SmartCube bidirectional communication
12345	TCP	Handheld Unit (HTTPS)
54321	TCP	Handheld Unit (HTTPS)
443	TCP	SmartCube Attendant PC
67	UDP	DHCP
68	UDP	DHCP

Interface	
PMS Interface Required	SmartCube / Robobar / AutoClassic

WiFi Specifications	
Standard	802.11 b,g,n 2.4Ghz
Encryption	WPA / WPA2-PSK
SSID	Hidden SSID with Password
Signal	-65dBm or better at the SmartCube location

Tablet Specifications	
Operating System	Android Version 7.1 (Nougat) or Later
Communication	Bluetooth & WiFi
Memory	16 GB

Tablet Communications	
Bluetooth	Used to connect tablet to SmartCube to perform refills
Wifi	Used to sync refills from server to tablet

SmartCube Client/Workstation Specifications	
Processor	2.4 GHz or faster (x86 or x64)
Memory	2GB Dedicated RAM
Ethernet	10/100 Fast Ethernet
Operating System	Windows 10 or higher
Browser	Chrome

SmartCube 40T Model Specification

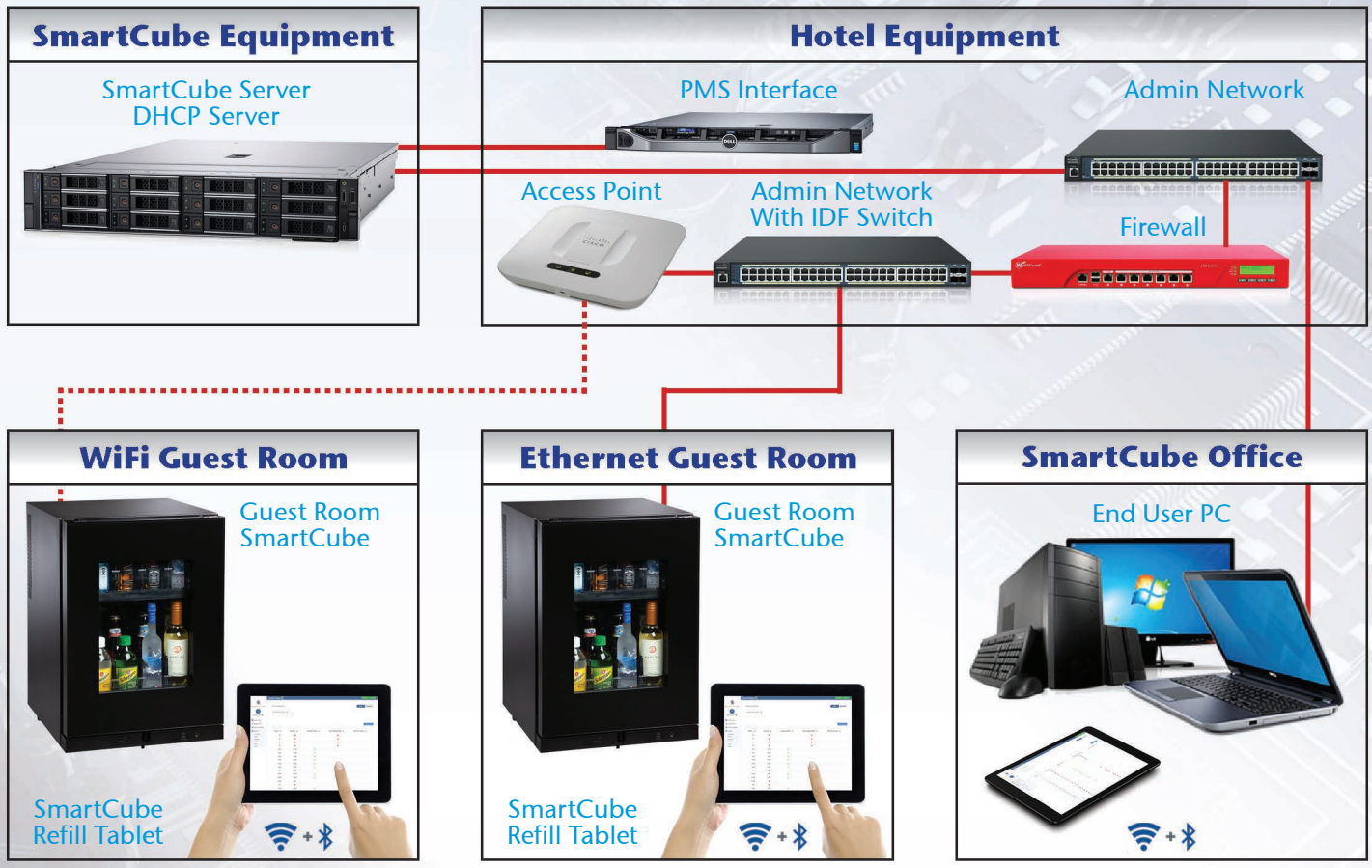

Server Minimum Requirements	
Type	Physical or Virtual
Processor	Dual Core 3GHz or faster (x86 or x64)
Memory	32GB Dedicated RAM
Operating System	Windows Server 2019 R2 (64 bits), 2022
Disk Space	500 GB minimum with redundancy (1TB recommended)
SmartCube Connection	10/100/1000 Ethernet
PMS Connection	10/100/1000 Ethernet or RS232

Network Requirements		
SmartCube Communication		SmartCube Server on Static IP Address on Dedicated SmartCube VLAN
PMS communication		PMS to provide static IP address and port number required to configure PMS interface integration
Port		Purpose
10001	UDP	SmartCube bidirectional communication
12345	TCP	Handheld Unit (HTTPS)
54321	TCP	Handheld Unit (HTTPS)
443	TCP	SmartCube Attendant PC
67	UDP	DHCP
68	UDP	DHCP

Interface	
PMS Interface Required	SmartCube / Robobar / AutoClassic

WiFi Specifications	
Standard	802.11 b,g,n 2.4Ghz
Encryption	WPA / WPA2-PSK
SSID	Hidden SSID with Password
Signal	-65dBm or better at the SmartCube location

Tablet Specifications	
Operating System	Android Version 7.1 (Nougat) or Later
Communication	Bluetooth & WiFi
Memory	16 GB

Tablet Communications	
Bluetooth	Used to connect tablet to SmartCube to perform refills
Wifi	Used to sync refills from server to tablet

SmartCube Client/Workstation Specifications	
Processor	2.4 GHz or faster (x86 or x64)
Memory	2GB Dedicated RAM
Ethernet	10/100 Fast Ethernet
Operating System	Windows 10 or higher
Browser	Chrome